XLI Juniors Estonian Open 28.02.2015 Tartu M+100

Competitors: 2

Competitors

#	Name	Club	1	2	1	2	1	2	Wins	Pts	Pos
1	RUSINS RALFS	ADAZI									
2	KARRO TANEL	AUDENTES									

Matches

Match	White			Blue	Result	Time
1	RUSINS RALFS	1	2	KARRO TANEL		
2	RUSINS RALFS	1	2	KARRO TANEL		
3	RUSINS RALFS	1	2	KARRO TANEL		

Results

Pos	Name
1	
2	

XLI Juniors Estonian Open 28.02.2015 Tartu M-100

Competitors: 7

Competitors A

#	Name	Club	1	2	3	4	Wins	Pts	Pos
1	BONDAR NIKITA	LIDO							
2	SKREBELS Rojs	LaT							
3	KUZNETSOV JEVGENI	AFINA							
4	TURUNEN TATU	FINLAND							

Matches A

Match	White			Blue	Result	Time
1	BONDAR NIKITA	1	2	SKREBELS Rojs		
2	KUZNETSOV JEVGENI	3	4	TURUNEN TATU		
4	BONDAR NIKITA	1	3	KUZNETSOV JEVGENI		
5	SKREBELS Rojs	2	4	TURUNEN TATU		
7	BONDAR NIKITA	1	4	TURUNEN TATU		
8	SKREBELS Rojs	2	3	KUZNETSOV JEVGENI		

Competitors B

#	Name	Club	5	6	7	Wins	Pts	Pos
5	KOPMANIS ELVIS	ALUKSNE						
6	REITAN HENRIK	NORWAY						
7	SIMONIS Rokas	LTU						

Matches B

Match	White			Blue	Result	Time
3	KOPMANIS ELVIS	5	6	REITAN HENRIK		
6	KOPMANIS ELVIS	5	7	SIMONIS Rokas		
9	REITAN HENRIK	6	7	SIMONIS Rokas		

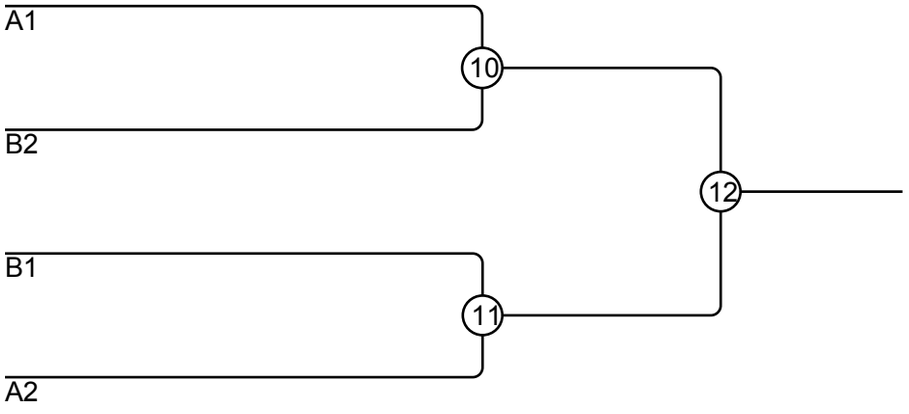

Results

Pos	Name
1	
2	
3	
3	

XLI Juniors Estonian Open 28.02.2015 Tartu M-60

Competitors: 7

Competitors A

#	Name	Club	1	2	3	4	Wins	Pts	Pos
1	NÖRDSTROM JOHAN	IK SÖDRA		10	10		2	20	
2	TUURALA HENRI	FINLAND				10	1	10	
3	LITJASOVS DMITRIJS	LJEPAJA KSS				10	1	10	
4	SOONISTE BRETT	DO							

Matches A

Match	White			Blue	Result	Time
1	NÖRDSTROM JOHAN	1	2	TUURALA HENRI	10 - 0	3:34
2	LITJASOVS DMITRIJS	3	4	SOONISTE BRETT	10 - 0	1:27
4	NÖRDSTROM JOHAN	1	3	LITJASOVS DMITRIJS	10 - 0	1:10
5	TUURALA HENRI	2	4	SOONISTE BRETT	10 - 0	0:13
7	NÖRDSTROM JOHAN	1	4	SOONISTE BRETT		
8	TUURALA HENRI	2	3	LITJASOVS DMITRIJS		

Competitors B

#	Name	Club	5	6	7	Wins	Pts	Pos
5	RATILAINEN JANI	FINLAND			10	1	10	
6	LOGANOVSKIS KIRILS	LJEPAJA KSS	10			1	10	
7	HEFFERMEHL JOHAN	NORWAY						

Matches B

Match	White			Blue	Result	Time
3	RATILAINEN JANI	5	6	LOGANOVSKIS KIRILS	0 - 10	3:06
6	RATILAINEN JANI	5	7	HEFFERMEHL JOHAN	10 - 0	3:01
9	LOGANOVSKIS KIRILS	6	7	HEFFERMEHL JOHAN		

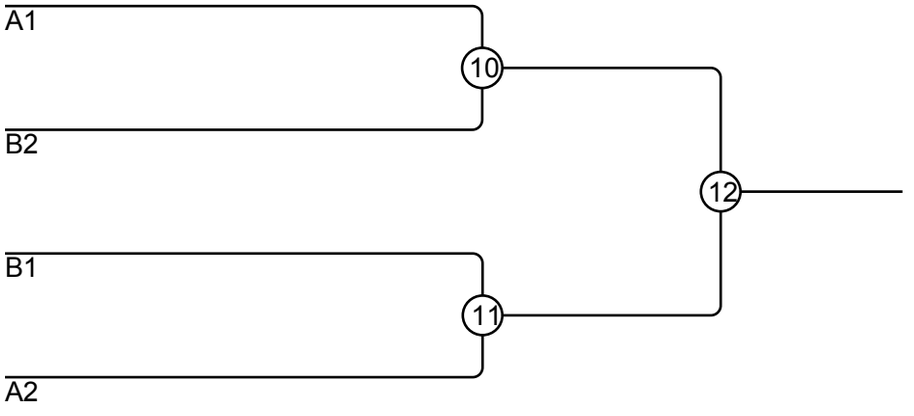

Results

Pos	Name
1	
2	
3	
3	

XLI Juniors Estonian Open 28.02.2015 Tartu M-66

Competitors: 10

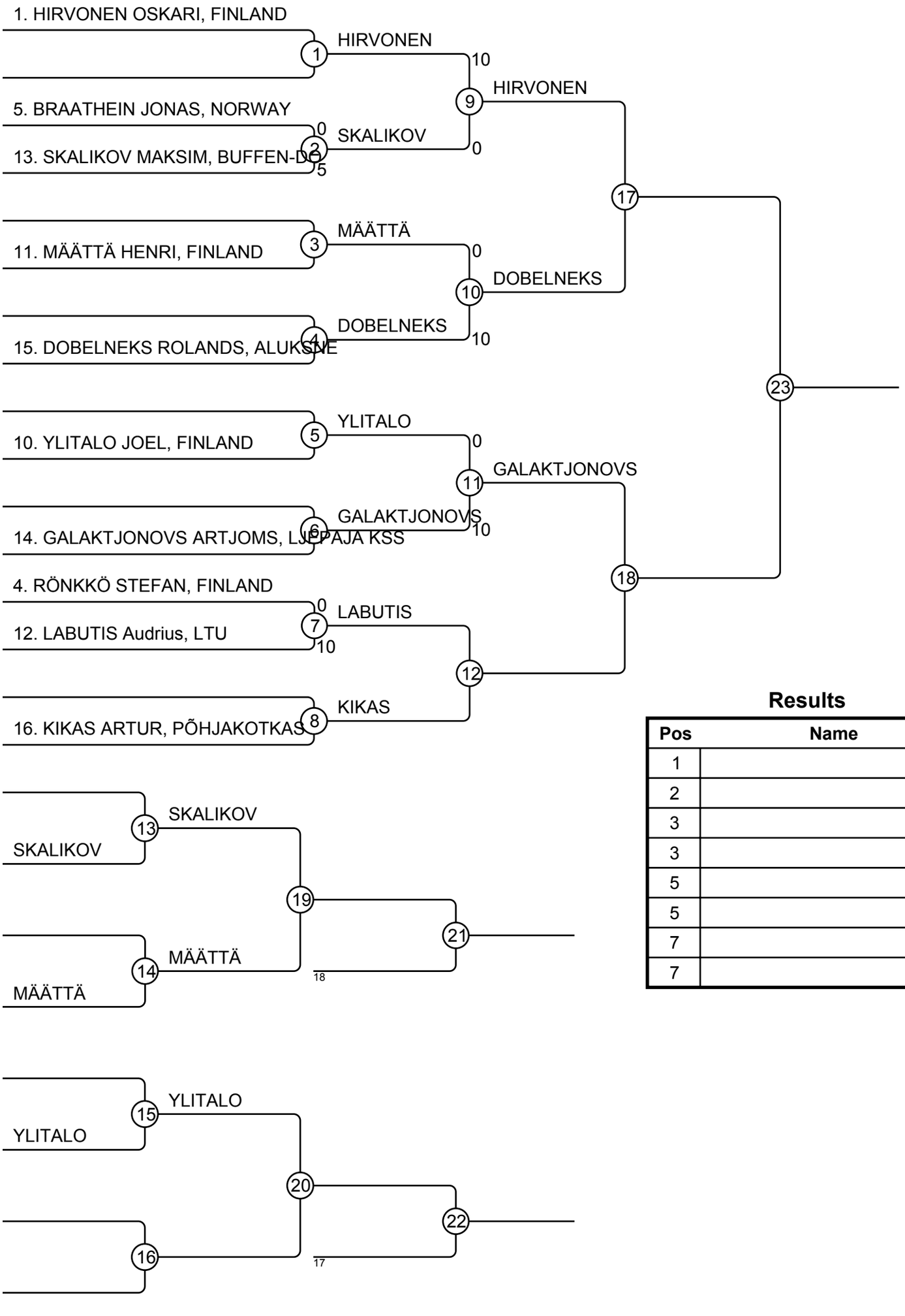

Results

Pos	Name
1	
2	
3	
3	
5	
5	
7	
7	

XLI Juniors Estonian Open 28.02.2015 Tartu M-73

Competitors: 21

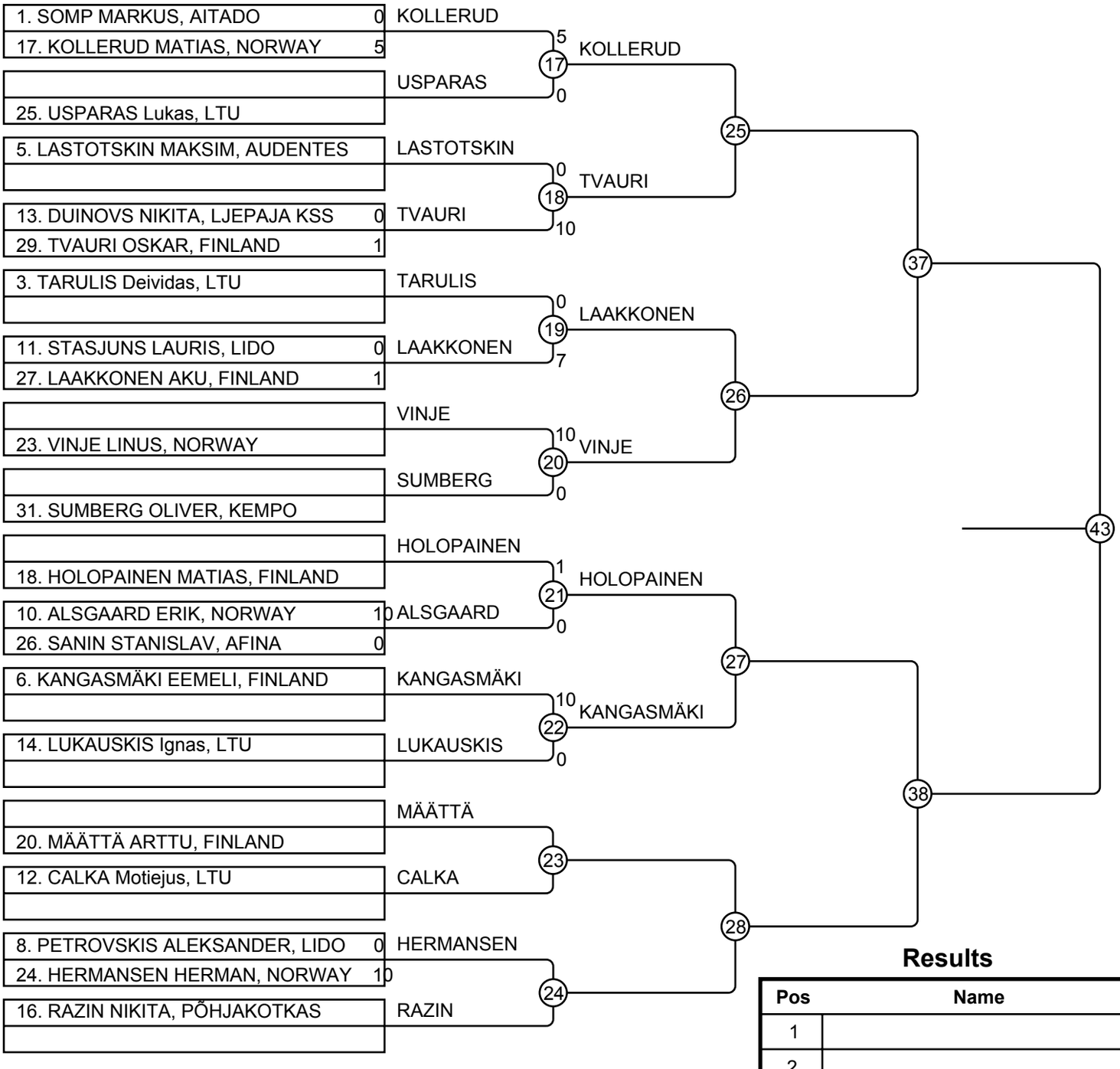

Results

Pos	Name
1	
2	
3	
3	
5	
5	
7	
7	

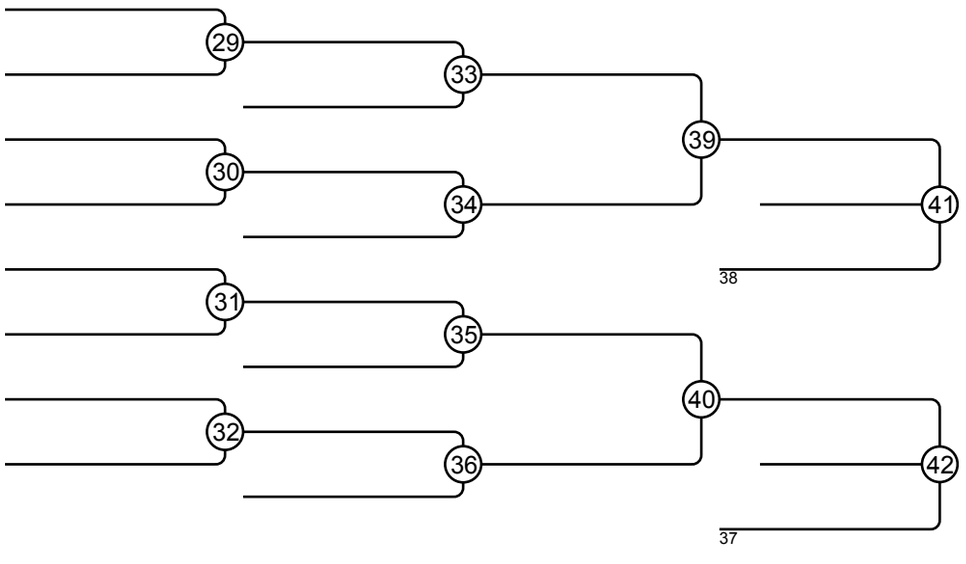

XLI Juniors Estonian Open 28.02.2015 Tartu M-81

Competitors: 15

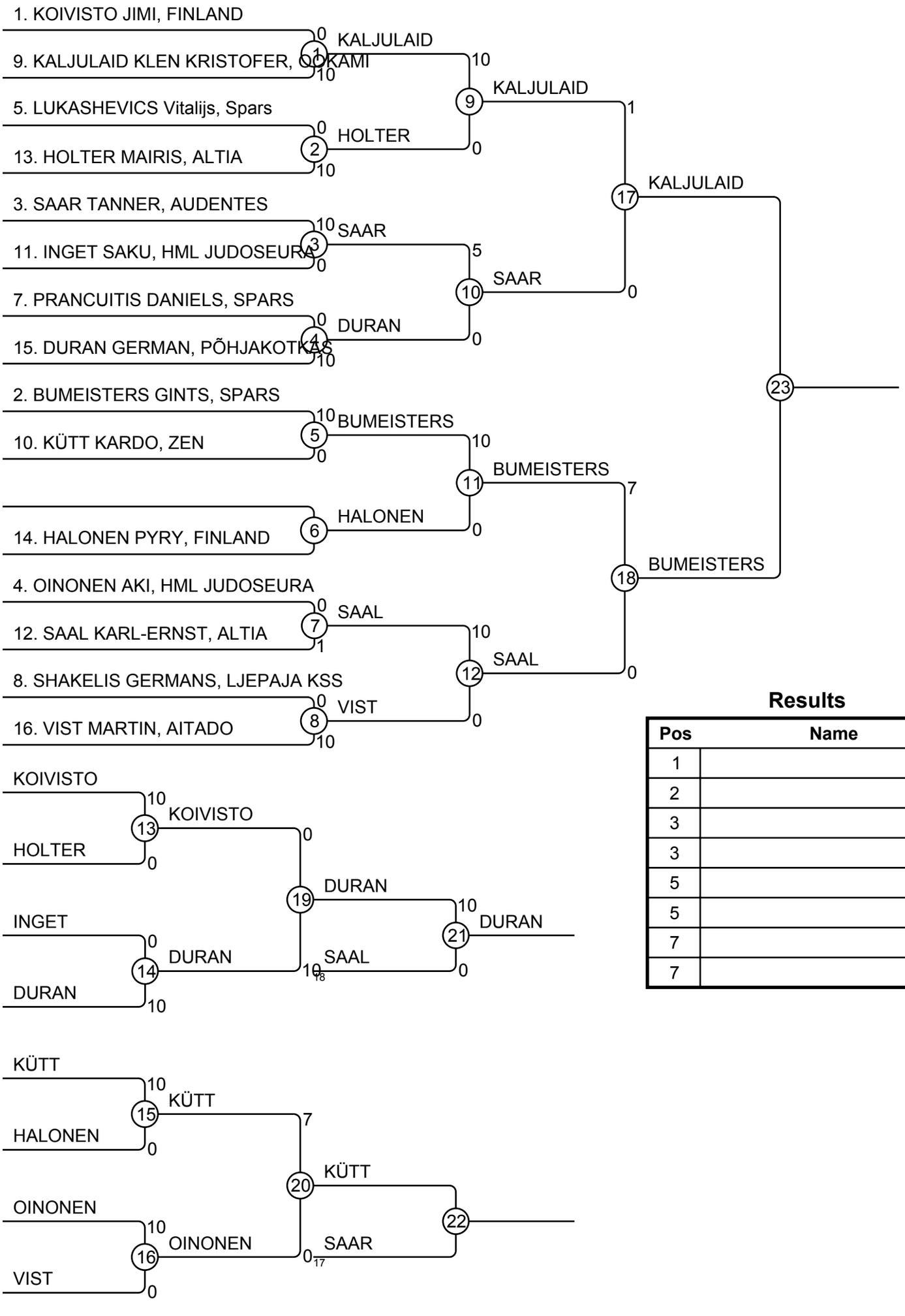

Results

Pos	Name
1	
2	
3	
3	
5	
5	
7	
7	

XLI Juniors Estonian Open 28.02.2015 Tartu M-90

Competitors: 5

Competitors

#	Name	Club	1	2	3	4	5	Wins	Pts	Pos
1	LAAMANEN AATU	FINLAND								
2	HANNULA HENRI	HML JUDOSEURA								
3	BENINS OSKARS	ALUKSNE								
4	KALININ ALEKSANDER	AUDENTES								
5	KUUSIK Mattias	Do								

Matches

Match	White			Blue	Result	Time
1	KALININ ALEKSANDER	4	5	KUUSIK Mattias		
2	LAAMANEN AATU	1	2	HANNULA HENRI		
3	BENINS OSKARS	3	4	KALININ ALEKSANDER		
4	LAAMANEN AATU	1	5	KUUSIK Mattias		
5	HANNULA HENRI	2	3	BENINS OSKARS		
6	LAAMANEN AATU	1	4	KALININ ALEKSANDER		
7	BENINS OSKARS	3	5	KUUSIK Mattias		
8	HANNULA HENRI	2	4	KALININ ALEKSANDER		
9	LAAMANEN AATU	1	3	BENINS OSKARS		
10	HANNULA HENRI	2	5	KUUSIK Mattias		

Results

Pos	Name
1	
2	
3	
4	
5	

XLI Juniors Estonian Open 28.02.2015 Tartu W-52

Competitors: 2

Competitors

#	Name	Club	1	2	Wins	Pts	Pos
1	BERZINA ANITA AIGA	ADAZI			0	0	2
2	KAUP CARIS HELENA	OOKAMI	10		1	10	1

Matches

Match	White			Blue	Result	Time
1	BERZINA ANITA AIGA	1	2	KAUP CARIS HELENA	0 - 10	2:21

Results

Pos	Name
1	KAUP CARIS HELENA, OOKAMI
2	BERZINA ANITA AIGA, ADAZI

XLI Juniors Estonian Open 28.02.2015 Tartu W-57

Competitors: 2

Competitors

#	Name	Club	1	2	Wins	Pts	Pos
1	JOKINEN ANNIINA	FINLAND		10	1	10	1
2	ROSSI EMMI	FINLAND			0	0	2

Matches

Match	White			Blue	Result	Time
1	JOKINEN ANNIINA	1	2	ROSSI EMMI	10 - 0	0:50

Results

Pos	Name
1	JOKINEN ANNIINA, FINLAND
2	ROSSI EMMI, FINLAND

XLI Juniors Estonian Open 28.02.2015 Tartu W-63

Competitors: 3

Competitors

#	Name	Club	1	2	3	Wins	Pts	Pos
1	NAZAROVA SERAFIMA	ADAZI				0	0	3
2	KRUMINA DIANA	LIDO	10			1	10	2
3	BARTON ALEXANDRA	FINLAND	10	10		2	20	1

Matches

Match	White			Blue	Result	Time
1	NAZAROVA SERAFIMA	1	2	KRUMINA DIANA	0 - 10	1:43
2	NAZAROVA SERAFIMA	1	3	BARTON ALEXANDRA	0 - 10	0:31
3	KRUMINA DIANA	2	3	BARTON ALEXANDRA	0 - 10	0:56

Results

Pos	Name
1	BARTON ALEXANDRA, FINLAND
2	KRUMINA DIANA, LIDO
3	NAZAROVA SERAFIMA, ADAZI

XLI Juniors Estonian Open 28.02.2015 Tartu W-70

Competitors: 2

Competitors

#	Name	Club	1	2	Wins	Pts	Pos
1	MAISTE BRITT	AITADO			0	0	2
2	NAELSO KRISTEL	TAIFU	10		1	10	1

Matches

Match	White			Blue	Result	Time
1	MAISTE BRITT	1	2	NAELSO KRISTEL	0 - 10	0:29

Results

Pos	Name
1	NAELSO KRISTEL, TAIFU
2	MAISTE BRITT, AITADO

XLI Juniors Estonian Open 28.02.2015 Tartu W-78

Competitors: 1

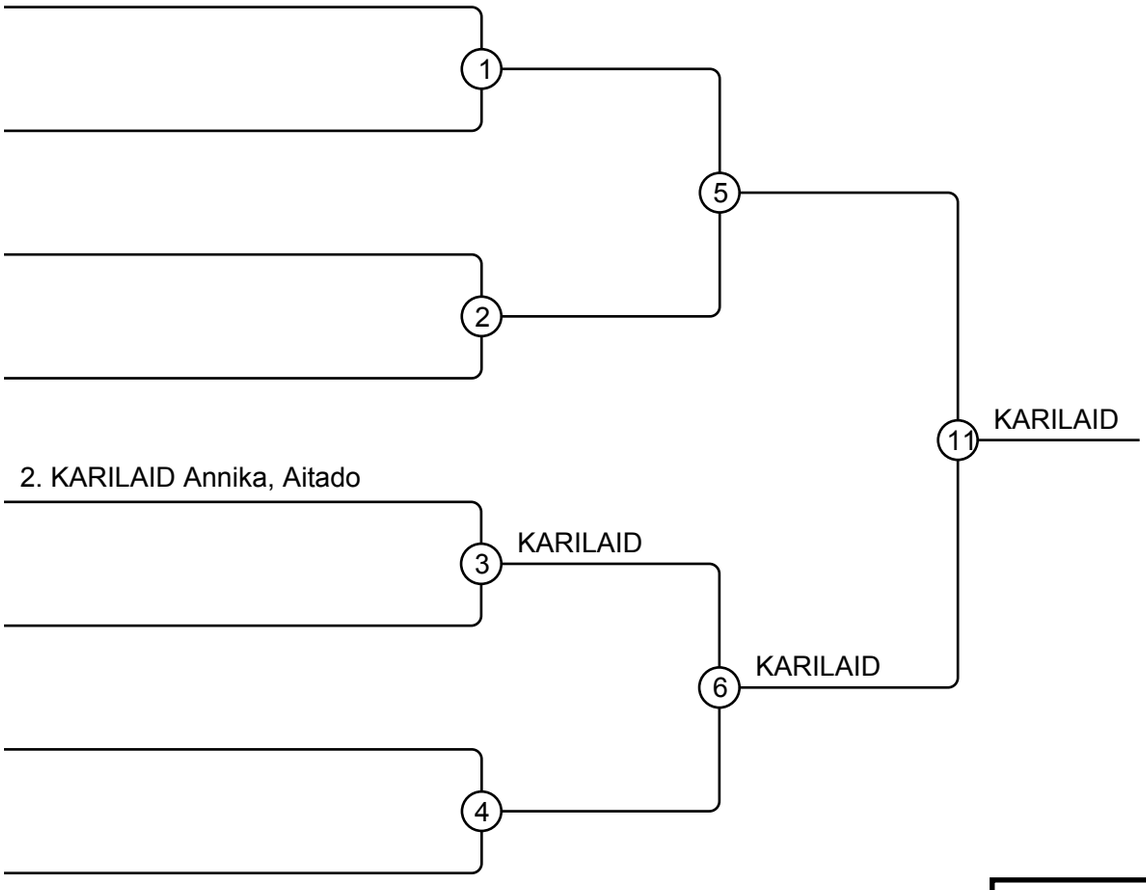

Results
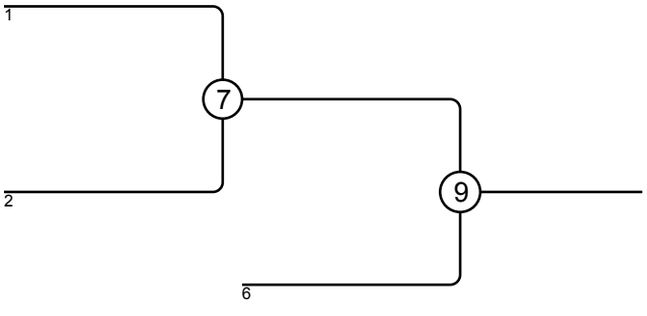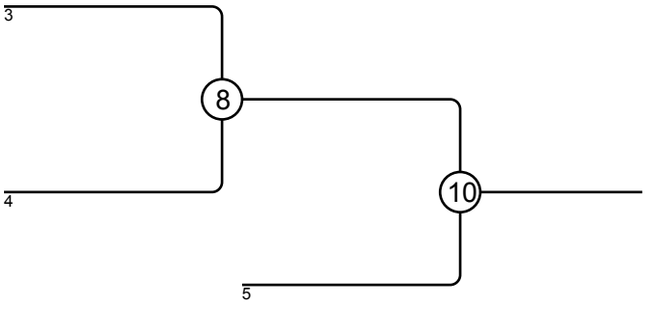
Pos	Name
1	KARILAID Annika, Aitado
2	
3	
3	
5	
5	
7	
7