# K. Keerak Judo Day 2024 2024-11-09 MU18-90

Competitors: 8

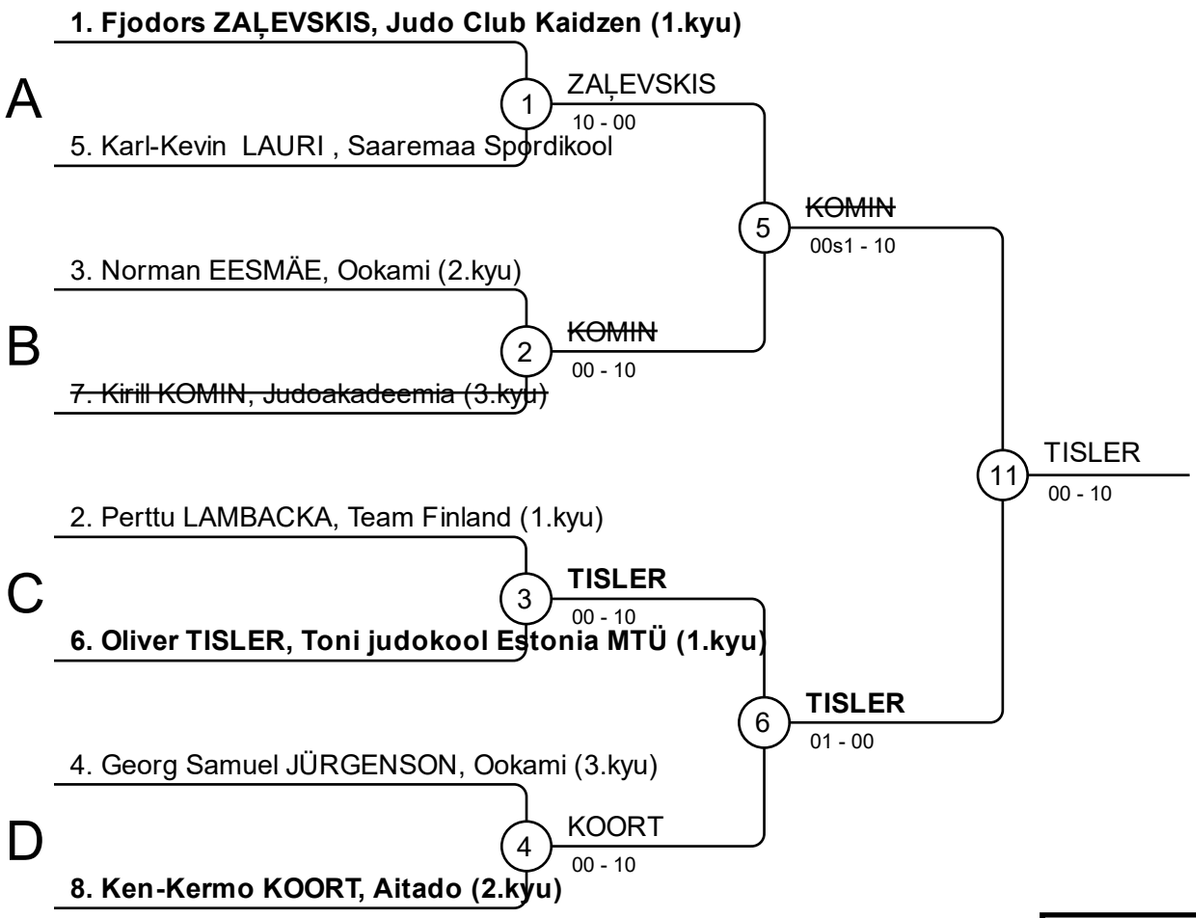


## Results
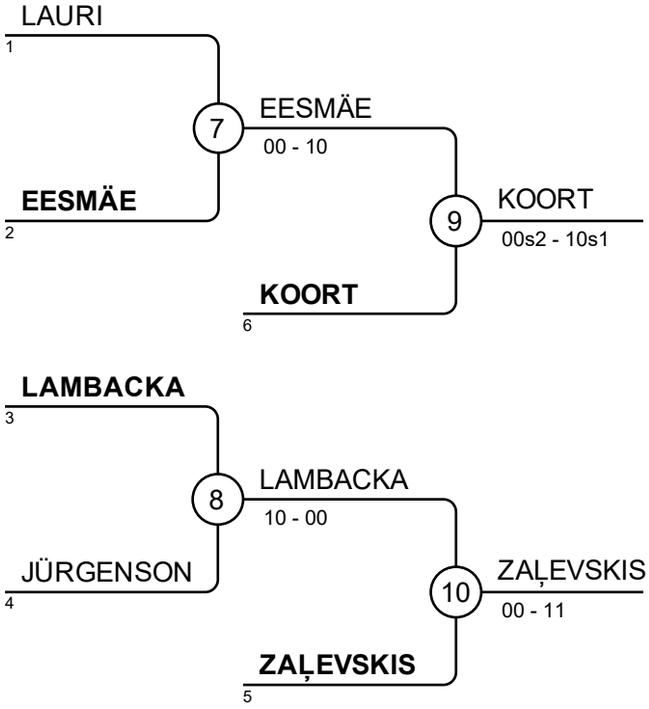
| Pos | Name |
|---|---|
| 1 | Oliver TISLER, Toni judokool Estonia |
| 2 | ~~Kirill KOMIN, Judoakadeemia~~ |
| 3 | Ken-Kermo KOORT, Aitado |
| 3 | Fjodors ZAĻEVSKIS, Judo Club Kaidz |
| 5 | Norman EESMÄE, Ookami |
| 5 | Perttu LAMBACKA, Team Finland |
| 7 | Karl-Kevin LAURI , Saaremaa Sporc |
| 7 | Georg Samuel JÜRGENSON, Ookam |