Rothberg CUP VIII 23.11.2024 Tallinn MU14-55

Competitors: 12

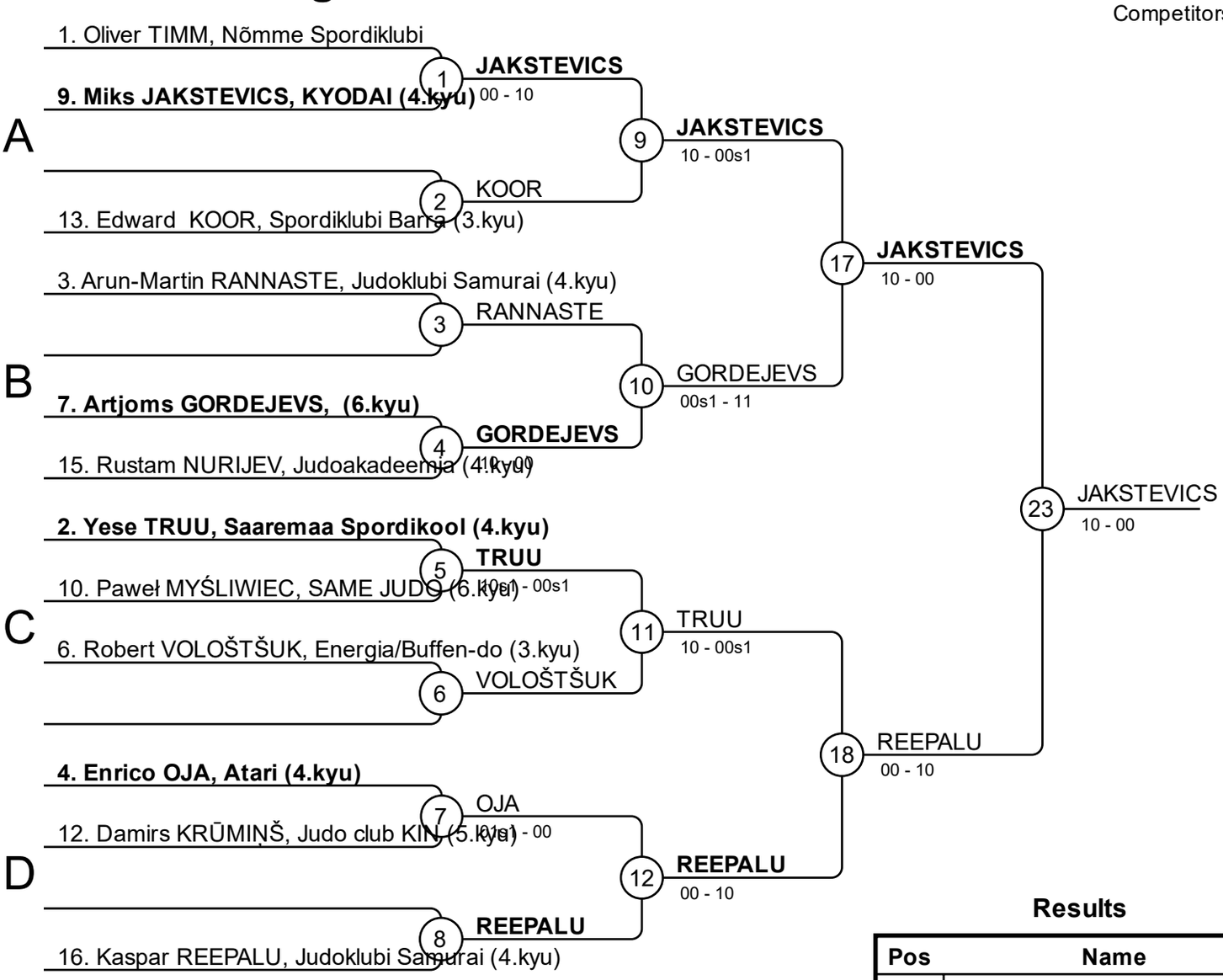

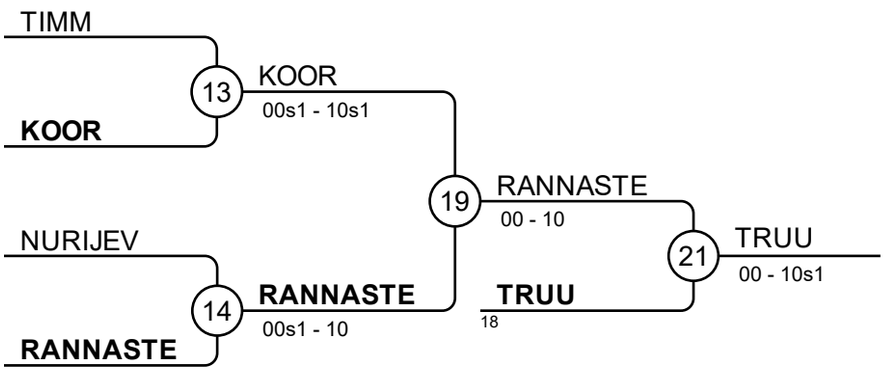

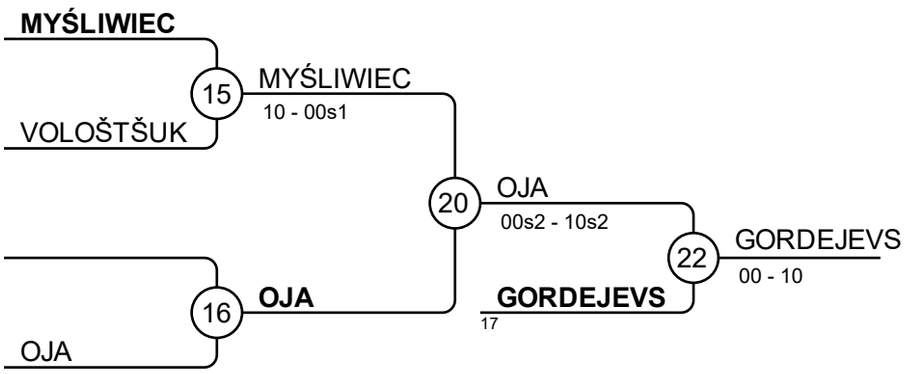

Results

Pos	Name
1	Miks JAKSTEVICS, KYODAI
2	Kaspar REEPALU, Judoklubi Samura
3	Yese TRUU, Saaremaa Spordikool
3	Artjoms GORDEJEVS,
5	Arun-Martin RANNASTE, Judoklubi S
5	Enrico OJA, Atari
7	Edward KOOR, Spordiklubi Barra
7	Paweł MYŚLIWIEC, SAME JUDO